MCT-434L:	**Industrial Automation**
Instructor:	Muhammad Rzi Abbas muhammadrziabbas@uet.edu.pk
Semester Project:	Automation Systems
Due Date	Report and Viva: 31st Dec. and 1st Jan.

Introduction

Students have learned about programming a PLC in multiple lectures through PLC simulators as well as on hardware. Furthermore, complete instruction set of the SLC series has been provided so that students may learn instructions on their own. Using the gained knowledge and learning a few things on their own, students are being assigned a semester project to gauge their level of understanding and readiness for clearing the practical portion of Industrial Automation.

This project will act as a **Complex Engineering Activity (CEA)** because of the following attributes.

- **Range of resources:** The project shall require the students to integrate range of algorithms and systems to successfully achieve the required target.
- **Familiarity:** Students shall use few techniques and methods not specifically described or introduced during the course. Therefore, they must go an extra mile to grasp few new things to successfully achieve the target.

Mapping to Course Learning Objectives

This semester project shall cover the following Course Learning Objectives.

- CLO1: **Configure** PLC trainer board for a given automation problem
- CLO2: **Build** PLC interfaces of different I/O devices for implementing and testing sustainable automation solutions.
- CLO3: **Present** their findings and data in the form of a viva/presentation.
- CLO4: **Conform** to ethical values related to presentation of experimental data.

Details of the Projects

Note: Overall project objectives must be read in conjunction with objectives defined in the Online Google Sheet.

Project # 1: Part Sorting with Conveyor Control

Suppose that your factory produces mixed mechanical parts. Before packaging, each part must pass through a quality inspection conveyor cell. The inspection relies on:

- **Proximity Sensor →** Detects if part is *metallic* (acceptable product).
- **IR Sensor →** Detects presence of any object (metallic or non-metallic).
- **Buzzer & LED →** Indicate various system states.
- **Forward/Reverse Conveyor Movement →** Move parts through the inspection area.
- **Auto/Manual Switch →** Defines system mode.

- **Process Reset Button →** Clears alarms and resumes operation.

Project Goal

Students must design a PLC program that controls the conveyor system to inspect parts, sort them, handle faults, and operate safely in Auto and Manual modes.

Functional Requirements

1. **System States:** The system must implement these operational states:
    a. **Manual**
        i. Triggered when **Auto/Manual switch = Manual**
        ii. Conveyor stopped.
        iii. LED indicates "System Ready" (Blink – 1 sec ON, 2 sec OFF).
    b. **Running – Auto Mode**
        i. Triggered when **Auto/Manual switch = Auto**
    c. **Fault/Alarm State**
        i. Triggered when IR sensor detects a part for more than *2 seconds* without movement → "Jam"
        ii. Push button (from trainer panel) assigned as **Emergency Stop** is pressed.
        iii. **In Alarm State:**
            1. Buzzer pulses (50% duty cycle with period of 1 sec.)
            2. LED flashes rapidly (50% duty cycle with period of 1 sec.)
            3. PLC waits for operator **Process Reset**.
2. **Auto Mode Logic (Main Sequence)**
    a. **Part Arrival Detection**
        i. **IR sensor goes HIGH** → presence of part confirmed.
        ii. **Material Inspection**
            1. **After IR sensor:**
                a. If Proximity sensor = HIGH → Part is metallic (Good item)
                b. If Proximity sensor = LOW even after 2 sec. → Non-metallic (defective or foreign item)
    b. **Sorting Mechanism**
        i. **If part is good (metallic):** Allow conveyor to keep on moving forward to "packaging zone".
        ii. **If part is bad (non-metallic):** Conveyor reverses for 4 seconds to send part back to "reject bin".
3. **Students must implement:**
    a. Interlock: Forward and reverse must never be active at same time.
    b. Timer-based motion control.
    c. Emergency Stop: Stop detection and sound alarm (50% duty cycle with period 0.5 sec.)
    d. If IR detects blocked part for too long (2 seconds) → Alarm.
    e. Instructor can flip a defined toggle switch to simulate sensor fault → Alarm.
4. **Manual Mode**

    a. **Conveyor Jogging** is already implemented via Forward and Reverse push buttons on the Conveyor Control board.
    b. **Sensors** should remain active but should not control the conveyor automatically.
5. **Additional Features**
    a. **Counting System**
        i. Count good vs. rejected parts
    b. **HMI on PC/Laptop**
        i. LED to show Alarm State
        ii. LED to show Auto/Manual State
        iii. LED to show Emergency Stop
        iv. Total part count
        v. Total good parts (metallic) count
        vi. Conveyor direction indication
        vii. **Production Rate:** Number of good parts per minute. (Time logging starts as soon as the system starts)

<u>Report (CLO3 and CLO4)</u>

Report must include the following information:

1. Abstract of the implementation
2. Input/Output Tags
3. State Diagram
4. Wiring diagram (inputs/outputs)
5. Test Cases
    a. How you tested alarms
    b. Screenshots of program in simulation

Project # 2: Dual-Zone Industrial Thermal Process Controller

Your factory runs a Thermal Treatment Unit used to condition materials in two separate chambers:

- Zone A (Voltage-based temperature section) Uses heater + cooling fan controlled by PLC digital outputs and provides a temperature feedback voltage (analog input).
- Zone B (Current-based temperature section) Uses a separate heater + fan controlled by PLC and provides temperature feedback as analog current (4–20mA).

Both zones must be independently controlled but coordinated to follow a defined industrial heating/cooling recipe used in curing, chemical processing, or materials testing.

Students must program the PLC to implement a full thermal process including setpoint control, ramp/soak behavior, safety monitoring, alarms, logging, and fault recovery.

<u>Project Goals</u>

Develop a PLC-based closed-loop temperature control system that operates two thermal zones using:

- Analog inputs (voltage + current)
- Digital heater and fan outputs

- Main trainer board's push buttons & toggle switches for operator interface
- Safety interlocks and alarms

<u>Functional Requirements</u>

PLC fully controls both zones through a multi-step thermal recipe:

- Thermal Recipe Example
  - Zone A
    - Preheat: Ramp from ambient to 35°C
    - Soak: Hold 35°C for 3 minutes
    - Cool: Reduce temperature to 30°C
    - Finish: Maintain within ±2°C for final 2 minutes
  - Zone B
    - Ramp to 40°C
    - Hold 40°C for 2 minutes
    - Cooldown to 35°C

Zones must operate simultaneously.

- Control Algorithm Requirements
  - PID using TIA Portal built-in PID Compact
    - Heating (deadband = 4°C)
      - Turn heater ON if temperature < (setpoint - deadband)
      - Turn OFF if temperature > setpoint
    - Cooling
      - Fan runs when temp > (setpoint + deadband)
      - FAN and HEATER must never be ON simultaneously
    - Soak Control
      - During soak temperature must stay within ±2°C tolerance, if out-of-range for >10 seconds → Alarm
- Alarms and Safety
  - High-Temperature Alarm
    - If either zone temperature > MAX limit (e.g. 45°C)
    - PLC shuts off heater immediately
    - Fan runs until temperature drops to safe level (e.g. 25°C)
    - Alarm LED flashes
  - Emergency Stop
    - Any push button designated as E-STOP:
    - Immediately shuts all outputs
    - Latches system in fault until Reset
- Operator Interface (Using Trainer Board Switches & Buttons)
  - SW1 → Enable "High Accuracy" mode (smaller deadband 2°C)
  - SW2 → Enable overtemperature shutdown test mode
  - PB1 → Emergency Stop
  - PB2 → Alarm Reset

- HMI
  - Temperature of both zones
  - Status of heater of both zones (ON/OFF)
  - Status of fans of both zones (ON/OFF)
  - Alarm, Emergency stop indication

<u>Report (CLO3 and CLO4)</u>

Report must include the following information:

1. Abstract of the implementation
2. Input/Output Tags
3. State Diagram
4. PID Values for both zones
5. Test Cases
   a. How you tested alarms
   b. Screenshots of program in simulation

Project # 3: Part Bonding application *(Should be implemented on AB PLC and Festo Electropneumatic Trainer)*

In a certain industry two plastic parts are bonded together by application of a bonding material between them and pressing them together with a defined force for a length of time. The worker applies the bonding paste with a brush, joins the two parts together, and place them under a pneumatic press. A capacitive proximity sensor detects the presence of the part. Now, when the worker presses a momentarily pressed normally open push button, a pneumatic press operates and presses the two parts together. The force is applied for 5 seconds. This is made sure by an inductive sensor that detects the full extension of the pneumatic press' cylinder. The timer that times 5 seconds only begin when the pneumatic cylinder has fully extended. The press retracts after 5 seconds, and a logger (counter) record that one part has been processed. If the logger's count reaches 5, that is 5 parts have been processed, the whole process should rest for 20 seconds. In these 20 seconds, even if the worker presses the push button, the pneumatic press should not operate.

Alarm: If the cylinder remains extended for more than 6 seconds the alarm light (blinking LED) should signal the cylinder jam and power to everything should be cut off. To start again, the start/stop button should be unlatched and then latched again.

Start/Stop Button: A normally open latching switch should act as a start/stop button.

E-Stop: A normally closed push button should act as an emergency stop button. If e-stop is pressed, the cylinder immediately retracts, and the system completely turns OFF. To start again, the start/stop button should be unlatched and then latched again.

A schematic is shown in the figure.

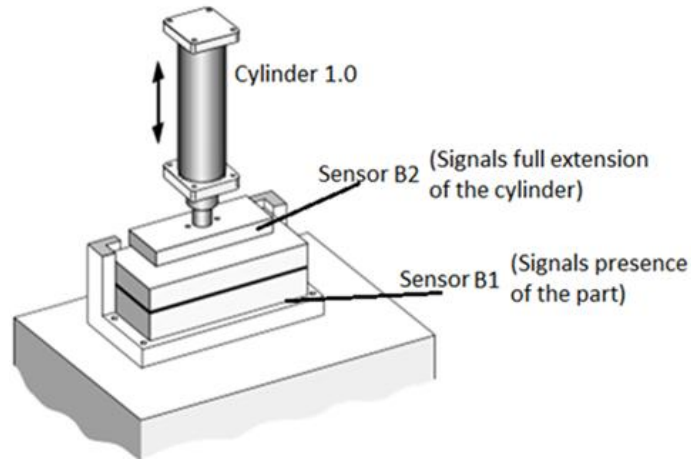

<u>Report (CLO3 and CLO4)</u>

Report must include the following information:

1. Abstract of the implementation
2. Input/Output Table
3. State Diagram
4. Test Cases
    a. How you tested alarms
    b. Screenshots of program in simulation

Project # 4: Part Bonding application *(Should be implemented on Siemens Trainer Board as a simulation-only project)*

In a certain industry two plastic parts are bonded together by application of a bonding material between them and pressing them together with a defined force for a length of time. The worker applies the bonding paste with a brush, joins the two parts together, and place them under a pneumatic press. A capacitive proximity sensor detects the presence of the part. Now, when the worker presses a momentarily pressed normally open push button, a pneumatic press operates and presses the two parts together. The force is applied for 5 seconds. This is made sure by an inductive sensor that detects the full extension of the pneumatic press' cylinder. The timer that times 5 seconds only begin when the pneumatic cylinder has fully extended. The press retracts after 5 seconds, and a logger (counter) record that one part has been processed. If the logger's count reaches 5, that is 5 parts have been processed, the whole process should rest for 20 seconds. In these 20 seconds, even if the worker presses the push button, the pneumatic press should not operate.

Alarm: If the cylinder remains extended for more than 6 seconds the alarm light (blinking LED) should signal the cylinder jam and power to everything should be cut off. To start again, the start/stop button should be unlatched and then latched again.

Start/Stop Button: A normally open latching switch should act as a start/stop button.

E-Stop: A normally closed push button should act as an emergency stop button. If e-stop is pressed, the cylinder immediately retracts, and the system completely turns OFF. To start again, the start/stop button should be unlatched and then latched again.

A schematic is shown in the figure.

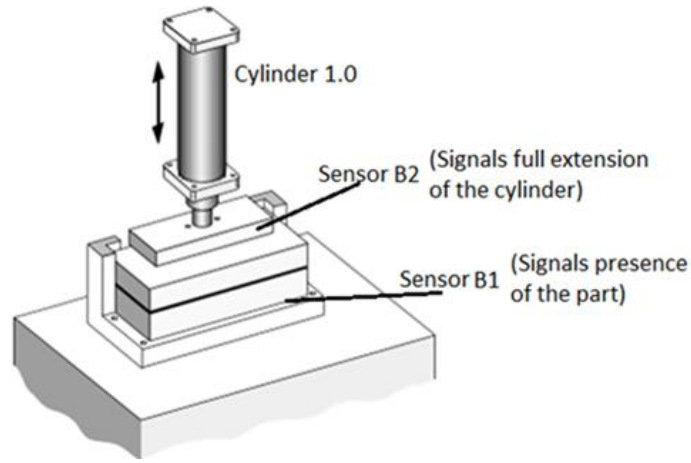

<u>Report (CLO3 and CLO4)</u>

Report must include the following information:

1. Abstract of the implementation
2. Input/Output Table
3. State Diagram
4. Test Cases
    a. How you tested alarms

Screenshots of program in simulation

Project # 5: Traffic Light Control

Design a PLC program for a traffic signal installed at an intersection of two roads. The four sides of the intersection should have traffic lights that allows traffic to move from one of the four sides at a time only. Sequence of lights to be followed is given below.

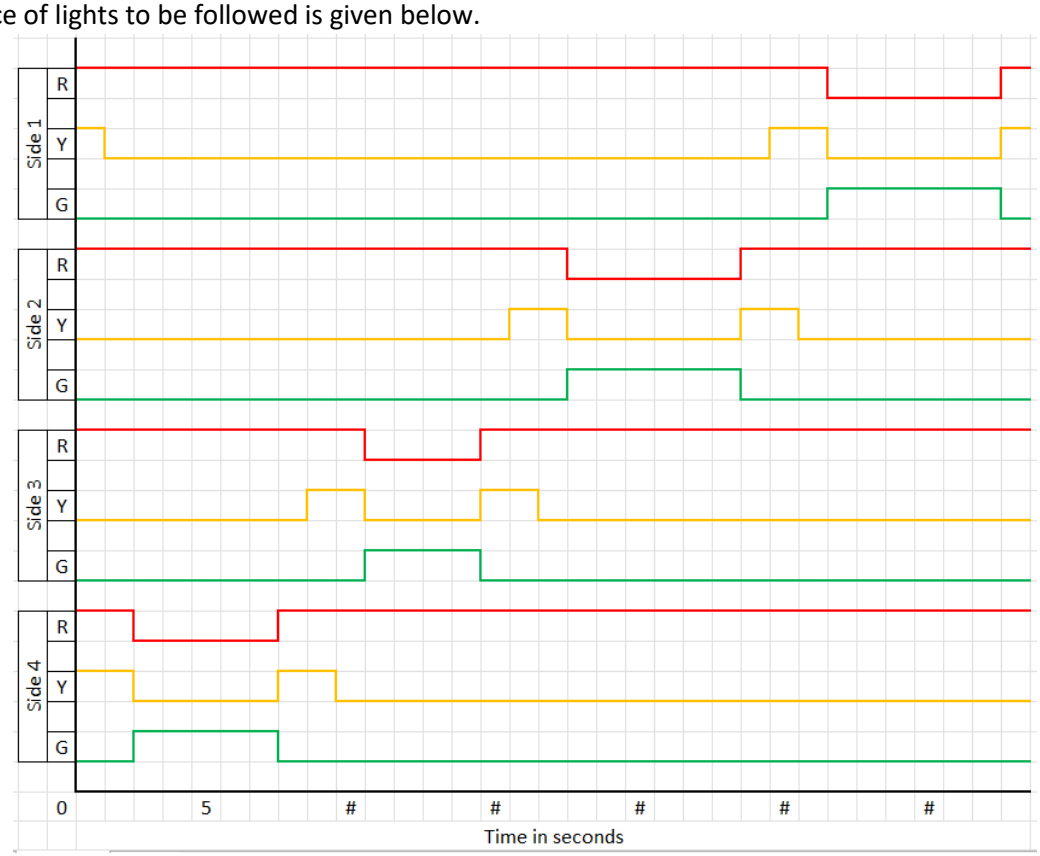

A latching start button **S1** should start the traffic signal light and the sequence should continue for as long as the start button is latched. Moreover, if another latching button **S2** is pressed, the traffic light cycle

stops and **emergency YELLOW light sequence** should start. In this sequence, all the **YELLOW lights should turn ON for 1.5 seconds and remain OFF for 1.5 seconds**. This sequence should continue for as long as button **S2** is latched.

Students should develop a Ladder Diagram on TIA Portal and demonstrate the working of the program on the Traffic Control Board available in the lab. Any suitable latching buttons, available on the trainer board, may be used as S1 and S2.

<u>Report (CLO3 and CLO4)</u>

Report must include the following information:

1. Abstract of the implementation
2. Input/Output Table
3. State Diagram
4. Test Cases
    a. Screenshots of program in normal running
    b. Screenshots of the program in emergency mode

Submissions and Weightages

The project must be presented during viva voce. Report must be submitted in printed form as well as via Google Classroom in PDF form.

Component	Weightage
Project (CLO1 and CLO2)	20% + 40%
Report (CLO3 and CLO4)	40% + Pass/Fail

Grading Rubric

Deliverable	Component	Level of Achievement	Marks
Project [CLO1]	Has the student used the trainer board perfectly and knows about its various functions? [CLO1, PLO5 – P2]	Student has no idea about the trainer board functionality.	0
		Student has a little knowledge about trainer board functionality.	5
		Student has considerable knowledge about the trainer board functionality.	15
		Student has complete knowledge about the trainer board functionality.	20
Project [CLO2, CLO4]	PLC Interface (Software) [CLO2, PLO7 – C6]	Student has no/little knowledge about using the PLC programming interface.	0
		Student has somewhat knowledge and know how to use the PLC programming interface.	10
		Student has complete knowledge and knows how to use the PLC programming interface.	20
	PLC Interface Hardware [CLO2, PLO7 – C6]	Student has no knowledge and doesn't know how to use the hardware PLC interface.	0
		Student has somewhat knowledge and know how to use the PLC hardware interface.	10
		Student has perfectly used the PLC hardware interface.	20
	Ethical Values [CLO4, PLO8 – A2]	Students presented their original work.	Project Pass/ Fail
Report [CLO3 and CLO4]	Ethical Values [CLO4, PLO8 – A2]	Plagiarism was less than 19% and AI content was less than 40%.	Report Pass/ Fail
	Report [CLO3, PLO10 – C2]	Were all required components presented in the report?	5
		Quality of state diagram.	15
		Was the methodology presented clearly and fully?	10
		Were test cases presented completely?	10